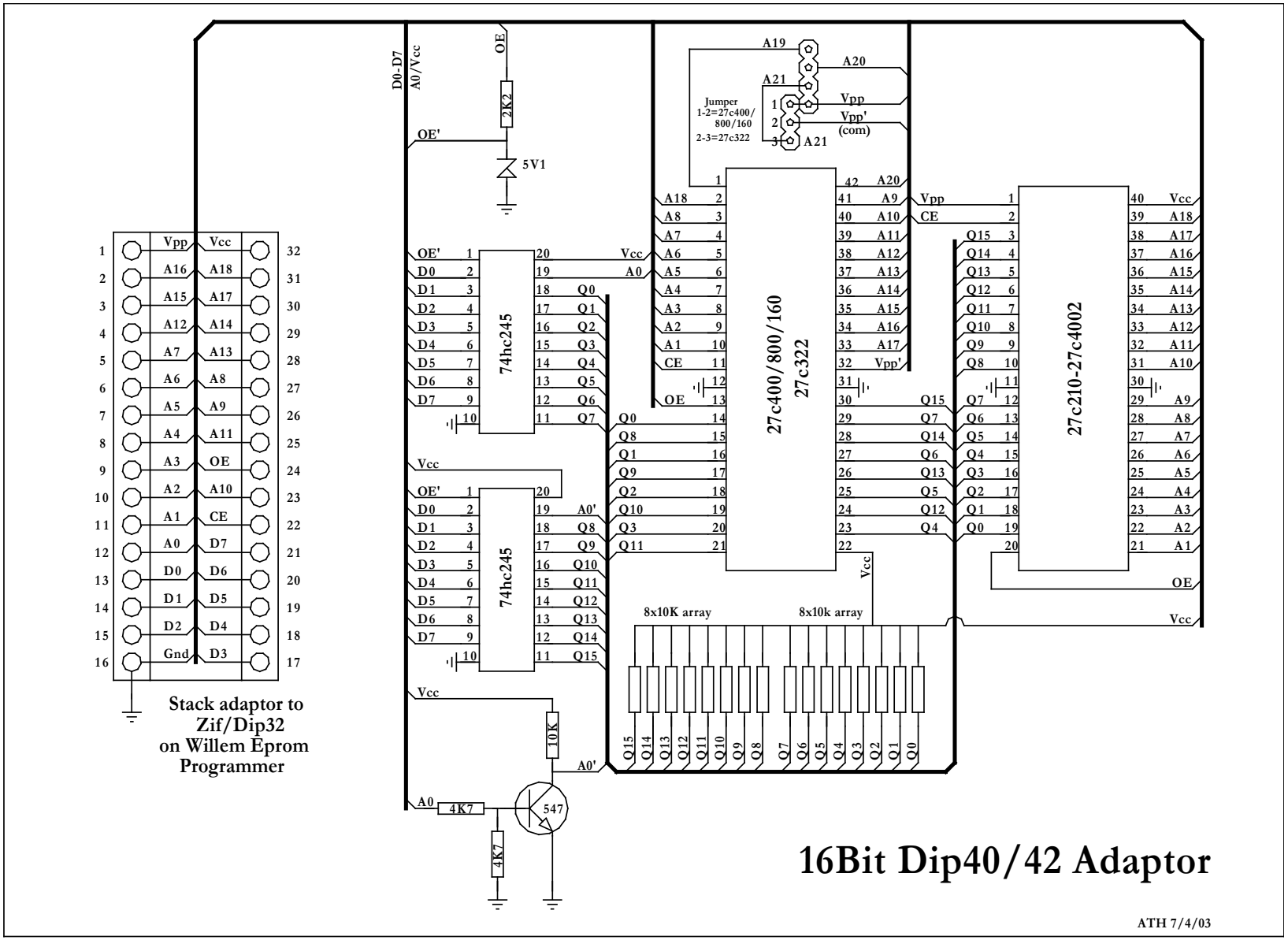
Stack adaptor to
Zif/Dip32
on Willem Eprom
Programmer
D0-D7
A0/Vcc
OE
2K2
OE'
5V1
74hc245
74hc245
Vcc
A0
A0'
10K
4K7
4K7
547
Jumper
1-2=27c400/
800/160
2-3=27c322
A19
A20
A21
Vpp
Vpp'
(com)
27c400/800/160
27c322
27c210-27c4002
8x10K array
8x10k array
16Bit Dip40/42 Adaptor
ATH 7/4/03